POLYLOK 24" BAFFLED D-BOX
PART NO. 3017-B24
MATERIAL - HDPE
NOMINAL WALL THICKNESS - .25"

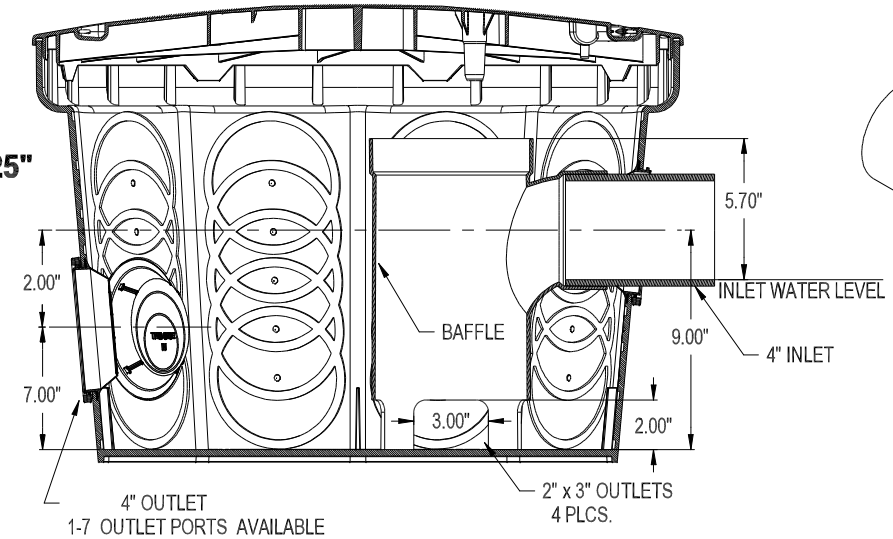

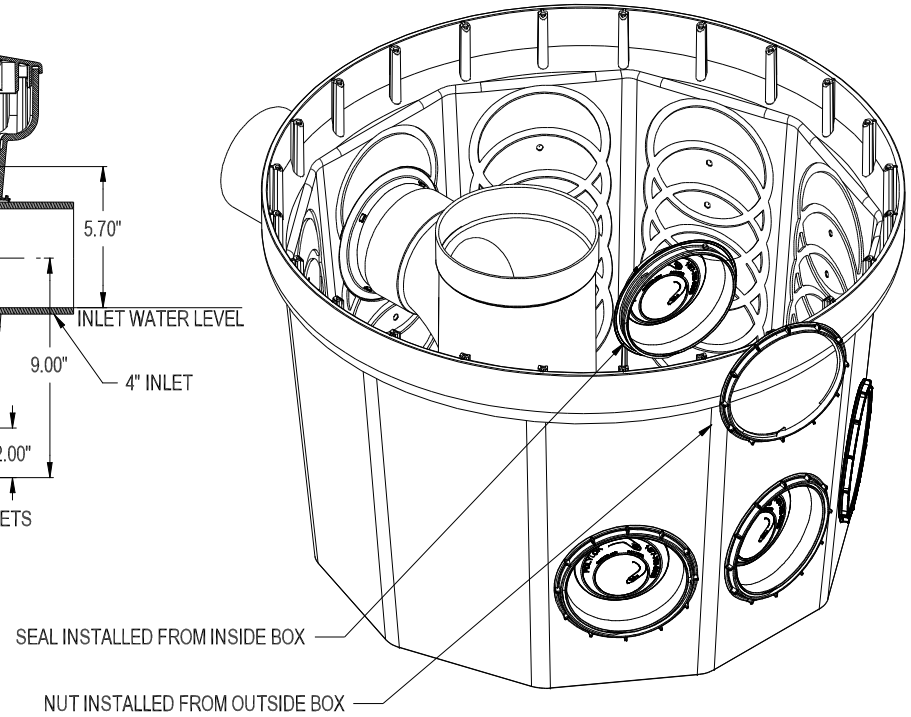

INSTRUCTION FOR ASSEMBLING 24" BAFFLED D-BOX
KENTUCKY APPROVAL # KY-PE7-0165
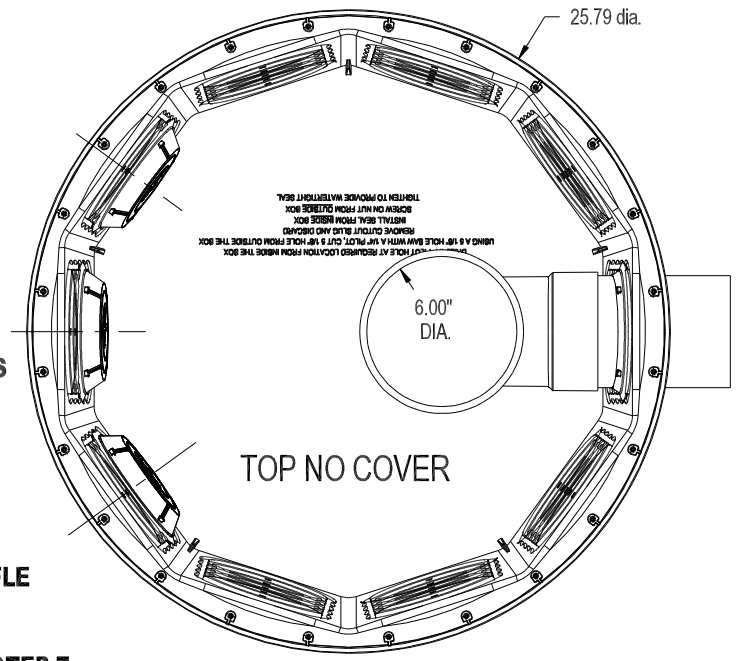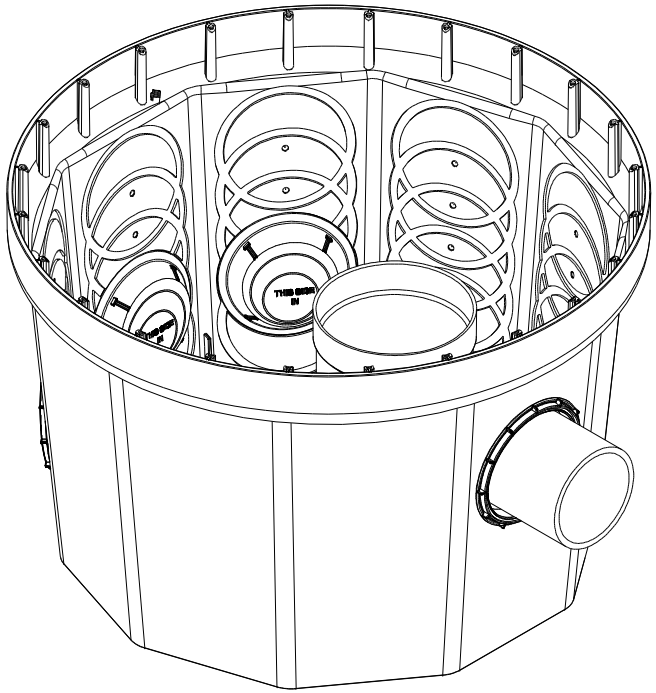
1. DETERMINE INLET LOCATION (2ND HOLE FROM THE TOP)
2. FROM INSIDE THE BOX, DRILL A 1/4" PIILOT HOLE THROUGH THE SIDE WALL AT THE DIPPLED LOCATION MARKING THE CENTER
3. USING A 5"-5 1/4" HOLE SAW CUT OUT HOLE FROM THE OUTSIDE THE BOX
4. DETERMINE WHICH OUTLETS ARE TO BE USED (ANY OF THE ONES 2ND FROM THE BOTTOM)
5. CUT OUT THE OUTLETS USING STEP 2 AND 3
6. INSTALL POLYLOK D-BOX SEALS AT ALL OPENINGS FROM INSIDE THE BOX
   INSTALL NUTS AND TIGHTEN FOR A WATERTIGHT SEAL FROM OUTSIDE THE BOX
7. ON INLET, TEAR OUT 4" TEAR OUT ON SEAL
8. SLIDE INLET PIPE THROUGH SEAL AND GLUE BAFFLE ON THE END
9. TEAR OUT THE REMAINING OUTLET SEALS AS IN STEP 7