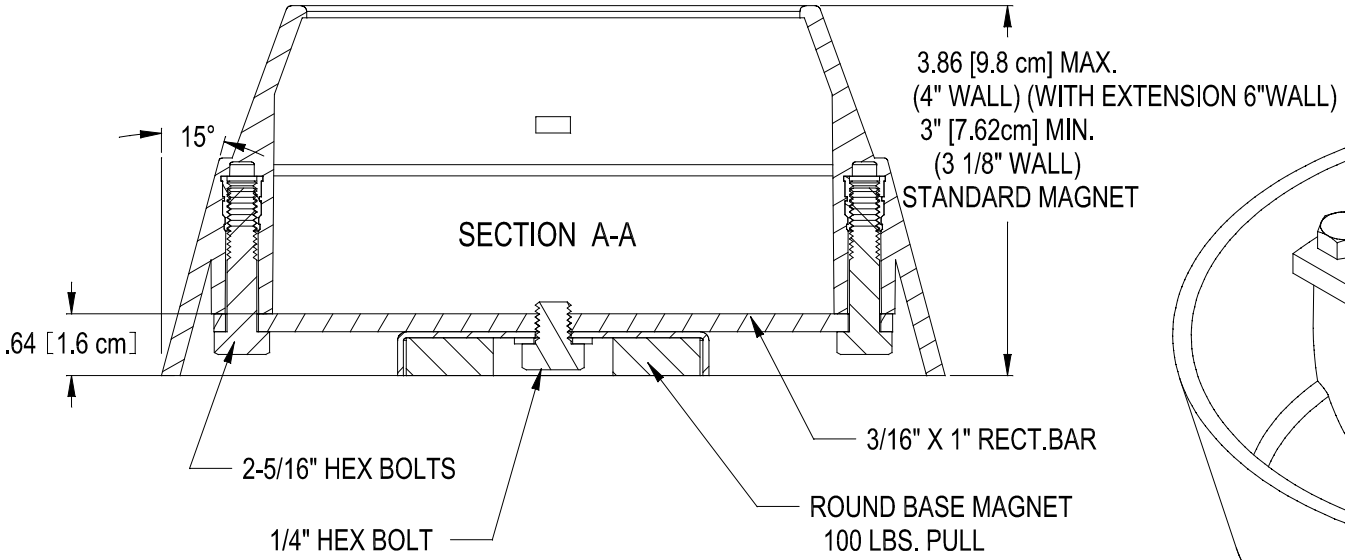

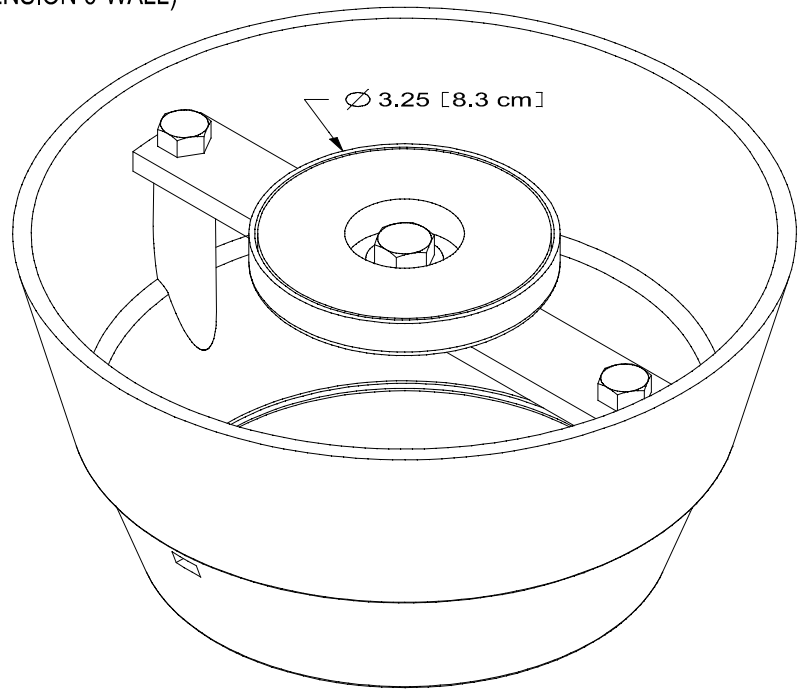

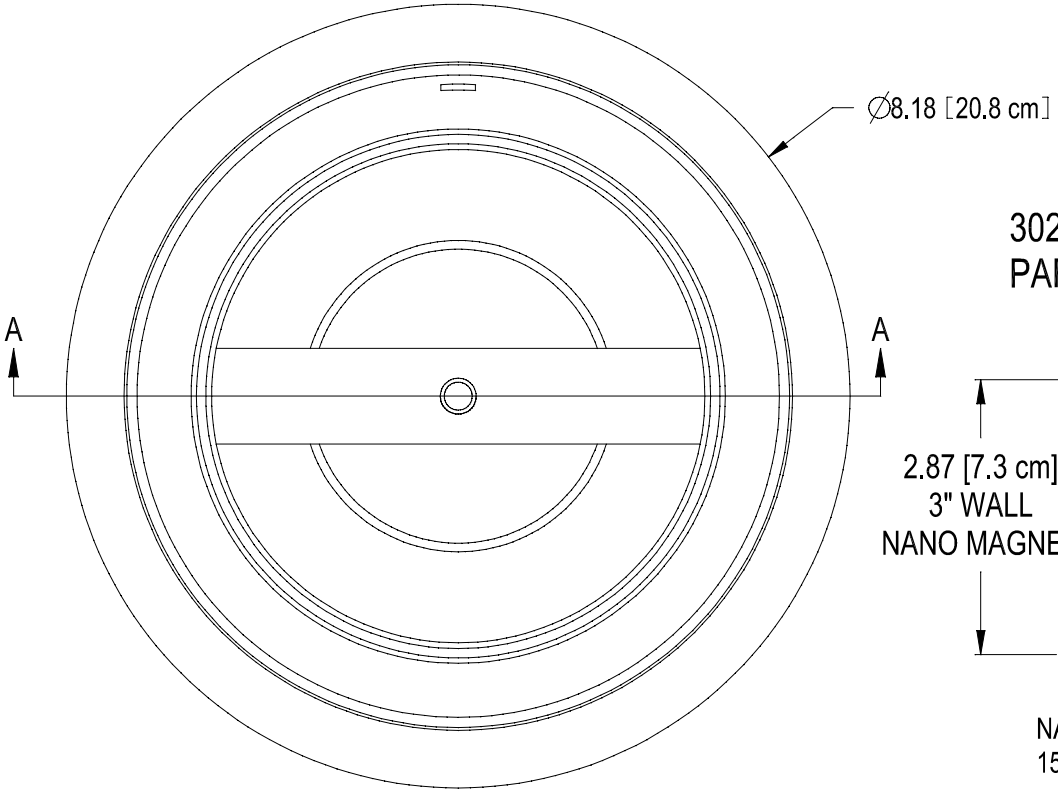
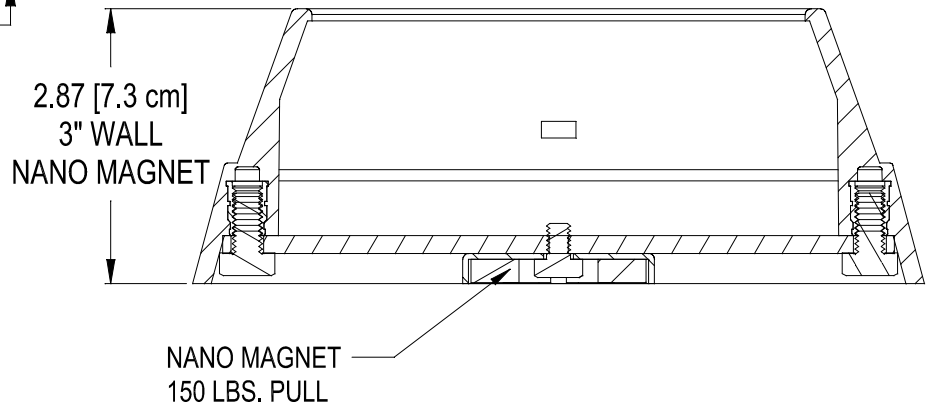
3022 MANDREL MAGNETIC MOUNT
PART NO. 3022-MAG